mm [inch]

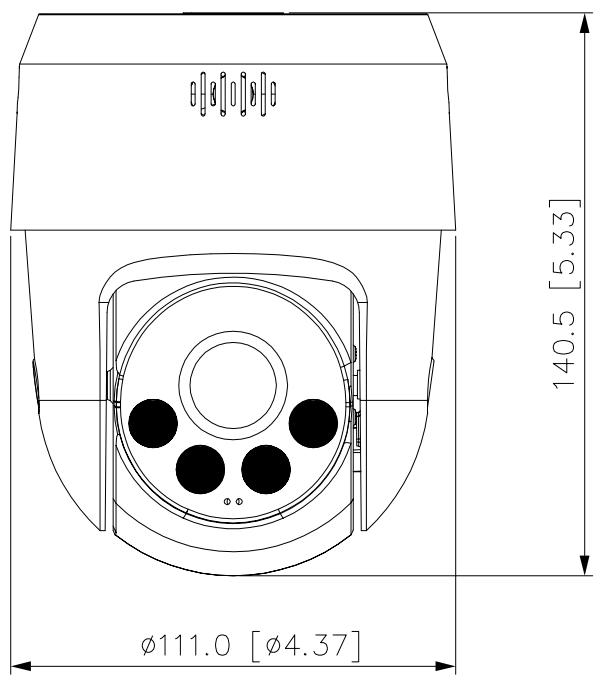
140.5 [5.33]
ø111.0 [ø4.37]

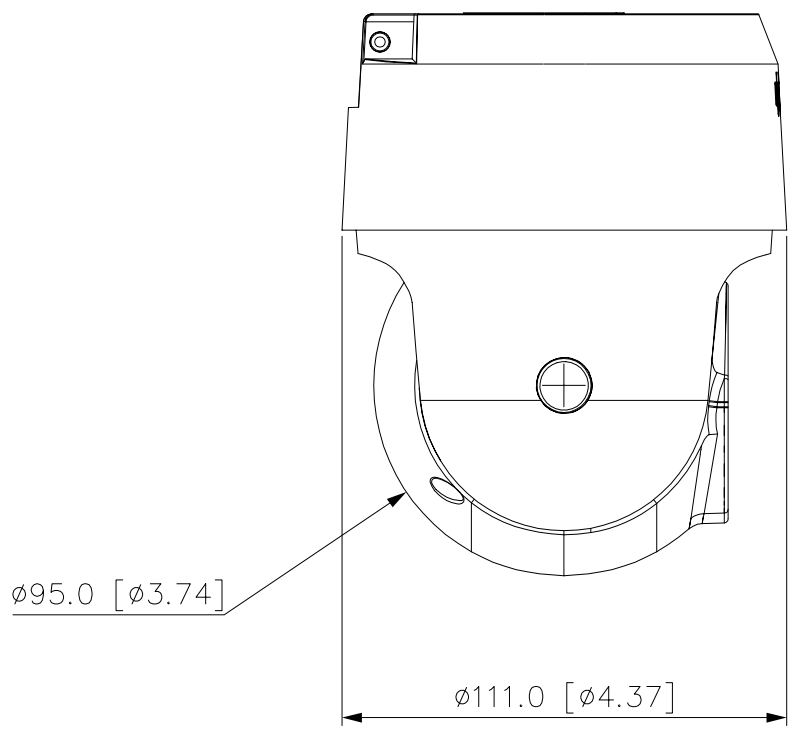
ø95.0 [ø3.74]
ø111.0 [ø4.37]

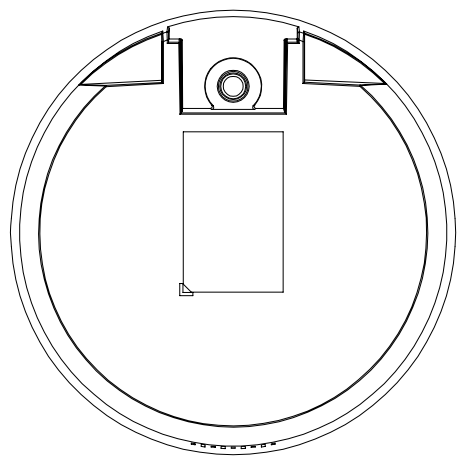

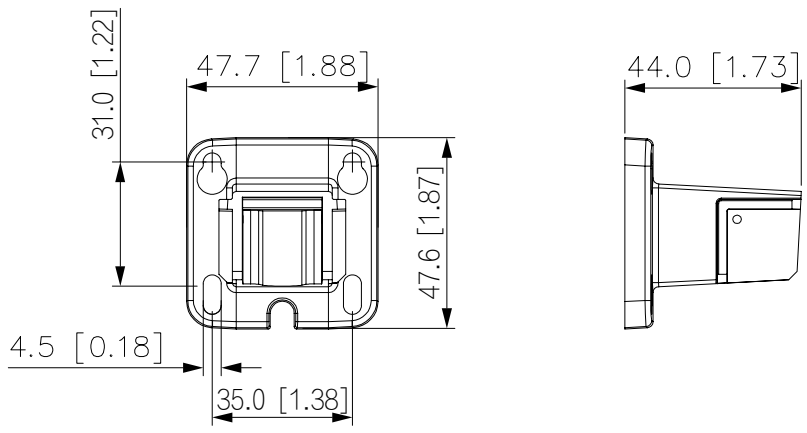
31.0 [1.22]
47.7 [1.88]
47.6 [1.87]
4.5 [0.18]
35.0 [1.38]
44.0 [1.73]