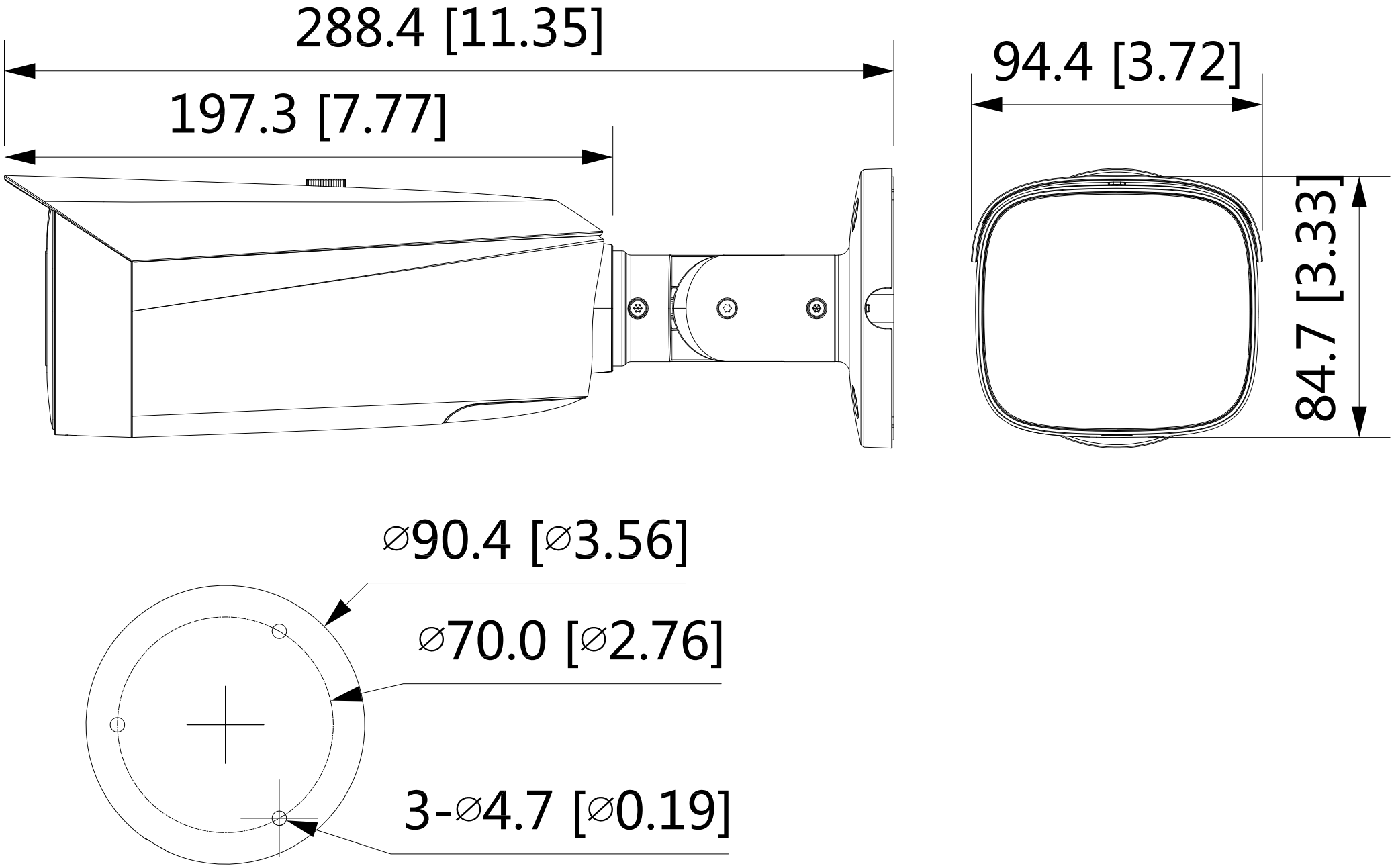
288.4 [11.35]
197.3 [7.77]
94.4 [3.72]
84.7 [3.33]
⌀90.4 [⌀3.56]
⌀70.0 [⌀2.76]
3-⌀4.7 [⌀0.19]